DRAKE

INSTRUCTION MANUAL



MN-4C

MATCHING NETWORK

R. L. DRAKE COMPANY, MIAMISBURG, OHIO, U.S.A.

INSTRUCTION MANUAL



MN-4C

MATCHING NETWORK



LIMITED WARRANTY

R. L. DRAKE COMPANY warrants to the original purchaser that this product shall be free from defects in material (except tubes and RF output transistors) or workmanship for ninety (90) days from the date of original purchase.

During the warranty period the R. L. DRAKE COMPANY or an authorized Drake service facility will provide free of charge both parts (except tubes and RF output transistors) and labor necessary to correct defects in material or workmanship.

To obtain such warranty service, the original purchaser must:

(1) Complete and send in the Warranty Registration Card.

(2) Notify R. L. DRAKE COMPANY or its nearest authorized service facility, as soon as possible after discovery of a possible defect, of:

(a) The model number and serial number, if any;

(b) The identity of the seller and the approximate date of purchase;

(c) A detailed description of the problem, including details on the electrical connection to associated equipment and the list of such equipment.

(3) Deliver the product to the R. L. DRAKE COMPANY or the nearest authorized service facility, or ship the same in its original container or equivalent, fully insured and shipping charges prepaid.

Correct maintenance, repair and use are important to obtain proper performance from this product. Therefore, carefully read the Instruction Manual. This warranty does not apply to any defect that R. L. DRAKE COMPANY determines is due to:

(1) Improper maintenance or repair, including the installation of parts or accessories that do not conform to the quality and specifications of the original parts.

(2) Misuse, abuse, neglect or improper installation.

(3) Accidental or intentional damage.

All implied warranties, if any, terminate ninety (90) days from the date of the original purchase.

The foregoing constitutes R. L. DRAKE COMPANY'S entire obligation with respect to this product, and the original purchaser and any user or owner shall have no other remedy and no claim for incidental or consequential damages. Some states do not allow limitations on how long an implied warranty lasts or do not allow the exclusion or limitation of incidental or consequential damages, so the above limitation and exclusion may not apply to you.

This warranty gives specific legal rights and you may also have other rights which vary from state to state.

R. L. DRAKE COMPANY
540 Richard Street • Miamisburg, Ohio 45342



PRINTED IN U.S.A.

TABLE OF CONTENTS

		Page
CHAPTER I	INTRODUCTION	1-1
1-1.	Description	1-1
1-2.	Specifications	1-2
CHAPTER II	INSTALLATION	2-1
2-1.	Unpacking	2-1
2-2.	Location	2-1
2-3.	Requirements	2-1
2-4.	Antenna Connections	2-2
CHAPTER III	OPERATION	3-1
3-1.	Front Panel Controls	3-1
3-2.	Rear Panel Connections	3-2
3-3.	Use of the Drake B-1000 Accessory Balun	3-3
3-4.	Operating Procedure	3-4
3-5.	Off-the-Air Tuning	3-7
3-6.	Reflected Power	3-7
3-7.	Use with Transceivers or T/R Combinations	3-8
CHAPTER IV	MAINTENANCE	4-1
	Schematic Diagram	4-2

CHAPTER I

INTRODUCTION

1-1. DESCRIPTION.

The typical modern transmitter has either a pi-network tank circuit or a broadband transformer output and will work into resistive loads of 50 to 75 ohms with Voltage Standing Wave Ratios (VSWR) of 2:1 or less. This resistive load can only be achieved with a resonant antenna; thus, for multiband operation, multiple antennas are required. Space and cost considerations render this solution impractical for most amateurs. The MN-4C impedance-matching network can:

1. Measure feedline VSWR, then reduce the VSWR at the transmitter output to 1:1.
2. Monitor transmitter power output in watts directly and continuously.
3. Attenuate 2nd harmonic output from a transmitter by 25 to 35 dB; thus it may eliminate the need for a low-pass TVI filter.
4. Match an antenna to a transmitter having fixed loading.
5. Give optimum match with multiband antennas.
6. Precisely match a transmitter to an antenna across a complete amateur band.
7. Permit off the air transmitter tuning and antenna matching at low power using a dummy load.

8. Store antenna loading adjustments for a transmitter while switching from "barefoot" to linear amplifier operation, when network is bypassed in the DIRECT position of the BAND switch.
9. Match transmitter output to a linear amplifier which does not have an input impedance of 50 ohms.
10. Help localize trouble by comparing transmitter output into an antenna and into a dummy load.
11. Allow antenna comparisons with the use of an antenna switch.
12. Permit the use of open-wire feedline antenna systems, with the use of an accessory balun.
13. Permit the use of long-wires of various impedance ranges. The accessory balun can be used to match the higher impedance ranges.

1-2. SPECIFICATIONS.

Frequency Coverage:	1.8 to 30 MHz. Band Switch marked for 160, 80, 40, 20, 15, and 10 meter amateur bands; however, frequency coverage between amateur bands is possible by using the nearest band position with a small reduction in matching capability.
Input Impedance:	50 ohms (resistive).

Load Impedance:	50 ohm coaxial with VSWR of 5:1 or less (3:1 on 10 meters). 75 ohm coaxial at a lower VSWR can be used.
Balanced Feedlines:	With the Drake B-1000 accessory balun, tunes feed point impedances of 40 to 1000 ohms, or 5:1 VSWR referenced to 200 ohms (3:1 on 10 meters).
Long-Wire Antennas:	Feed point impedances up to 5:1 VSWR referenced to 50 ohms. Also, 5:1 referenced to 200 ohms with the Drake B-1000 accessory balun (3:1 on 10 meters).
Power Capability:	For use with transmitters with 250 watt output (500 watt input power).
Meter:	Reads forward power, 0-300 watts, or VSWR.
Wattmeter Accuracy:	±5% of reading +2 watts.
Insertion Loss:	0.5 dB or less on each band after tuning.
Dimensions:	Height: 4-17/32 in. (11.5 cm.) Width: 13-3/32 in. (33.26 cm.) Depth: 8-1/2 in. (21.6 cm.) including connectors. Weight: 7.9 lbs. (3.6 kg.)

Front Panel Controls: Provide for the adjustment of resistive and reactive tuning and VSWR calibration, antenna switching, band switching, and selection of watts or VSWR functions of the meter.

Rear Panel Connectors: The rear panel has four type SO-239 connectors (one for input and 3 for outputs), three screw terminal connections (for long-wire and open-wire feeder systems), and a ground post.

CHAPTER II

INSTALLATION

2-1. UNPACKING.

Carefully remove the MN-4C from the shipping carton and examine it for evidence of damage. If any damage is discovered, immediately notify the transportation company that delivered the unit. Be sure to keep the shipping carton and packing material for the transportation company to examine if there is a damage claim. Keeping these items is recommended, in any case, since having them available makes shipment of the unit much easier should it ever be necessary to return it to the factory for service.

NOTE

Fill out the enclosed registration card and return it to the factory immediately to insure registration and validation of the warranty.

2-2. LOCATION.

The MN-4C will work properly in almost any location. Select a location on the operating table that will allow you to reach the control knobs easily.

2-3. REQUIREMENTS.

Connect the RF output of your transmitter to the XMTR connector of the MN-4C, using 50 ohm coaxial cable such as RG-8/U or RG-58/U. Cable length is not critical. In installations using a transceiver or transmitter-receiver combinations, the matching

network should be the last item the out-going RF signal passes through before entering the feedline to the antenna. The effects of this on receiver operation will be discussed in Chapter III, Operation, of this manual.

Bond the EXT GND post of the matching network to the station ground with a short piece of heavy braid.

2-4. ANTENNA CONNECTIONS.

Antennas such as beam antennas, single band dipoles, trap dipoles, and verticals fed with coaxial cable should be connected to the rear panel connectors marked ANT 1 or ANT 2. Antennas fed with other than coaxial cable should be connected as explained in Chapter III, Sections 3-2 and 3-3, of this manual.

CHAPTER III

OPERATION

3-1. FRONT PANEL CONTROLS.

BAND Switch: The primary function of the BAND switch is the selection of the fixed capacitors and inductors needed for each band. Setting the BAND switch to the DIRECT position removes the matching network from the circuit and connects the RF through the meter circuit directly to the antenna selected.

ANTENNA Switch: Selects the desired antenna and grounds all unused antenna terminals. Positions are provided for: Dummy load (Which also grounds all antennas), 2 coaxial fed antennas, and 2 long-wire antennas (without accessory balun). With accessory balun, balanced feedline capability is available, or 1:1 and 4:1 match to a long-wire antenna.

RESISTIVE Tuning: The RESISTIVE Tuning Control varies the resistive component of the matching network to achieve a match with the resistive component of the antenna impedance.

REACTIVE Tuning:	The REACTIVE tuning control is used to tune out the reactive component of the antenna impedance.
Resistive Range Switch:	Switches in additional fixed capacity to provide additional resistive tuning ranges.
Reactive Range Switch:	Switches in additional fixed capacity to provide additional reactive tuning ranges.
Push to Set - Release for VSWR:	This control is used to vary the sensitivity of the meter circuit, and to calibrate the meter.
Forward Watts - VSWR:	This switch connects the proper circuitry to allow the meter to read either forward power in watts, or VSWR, as desired.

3-2. REAR PANEL CONNECTIONS.

XMTR Jack:	SO-239 socket for input from the transmitter.
DL Jack:	SO-239 socket for the connection of a dummy load (or another coaxial fed antenna).
ANT 1 and ANT 2:	SO-239 sockets for 2 separate coaxial fed antennas.

LW3 and LW4: Screw terminals for two long-wire antennas, when used without the accessory balun (1:1 impedance ratio to matching range of network). Numbers correspond to ANTENNA selector switch position.

3-3. USE OF THE DRAKE B-1000 ACCESSORY BALUN.

Installation: Remove the three screws at terminals marked LW3, LW4, NC, and then reinstall these screws through the holes in the balun board to the matching terminals on the MN-4C. Also, install the two mounting screws in the other two corners of the balun board to the MN-4C.

Balanced Feedlines: The two wires of the balanced feeders are connected on the top of the balun board, under the heads of terminal screws marked BAL and BAL/LW (1:1 or 4:1). The ANTENNA selector switch is placed in position 3 when this antenna system is used.

Long-Wire Antenna

Using Balun: (Cannot be used when balanced feeders are attached.)

Connect the long-wire to the terminal marked BAL/LW (1:1 or 4:1). In ANTENNA switch position 3, the antenna will be matched with a 1:1 impedance ratio. In position 4, the antenna will be matched with a 4:1 impedance ratio, providing for a higher impedance range matching capability.

Multiband Antenna: A doublet antenna 135 feet long, center fed with open-wire feeders 67 feet long, can be matched using the accessory balun on 80 through 10 meters. The feeders make a good 160 meter vertical when connected together and to the BAL/LW (1:1 or 4:1) terminal of the balun.

3-4. OPERATING PROCEDURE.

CAUTION

An antenna or a dummy load MUST be connected to the MN-4C before energizing the transmitter to avoid damage to the matching network and the transmitter. Initial tuning must be done with low transmitter power. Final small adjustments may be made at full power. Do not change any switch positions under high power. Preset the operating controls:

BAND Switch:	To desired band
Resistive Tuning:	To 5
Reactive Tuning:	To 5
Resistive Range:	To 0 - 10
Reactive Range:	To 0 - 10
Push - Adjust:	Fully Counterclockwise
FWD Watts - VSWR:	To VSWR

Energize the transmitter, apply low power to the matching network, adjust the transmitter plate tuning to resonance, and adjust loading to minimum (max. capacity). The VSWR meter should read upscale. Vary the RESISTIVE tuning until the VSWR dips. If there is not enough tuning range to dip the VSWR, switch in or out the resistive range capacitor as needed to dip the VSWR. Then turn the REACTIVE tuning control clockwise to bring the VSWR indication upscale. Readjust the RESISTIVE tuning for a dip. If this dip is downscale from the first dip, you are tuning in the right direction, and should continue to alternately move the REACTIVE tuning control clockwise and tune the RESISTIVE tuning for a dip, until a minimum VSWR indication is obtained.

If the second dip found reads higher on the meter than the first dip, the REACTIVE tuning control must be turned counterclockwise a short distance, and the RESISTIVE tuning adjusted for a dip. Continue alternating these actions until a minimum VSWR reading is reached.

Again, if additional tuning range is needed, switch in or out the range capacitors to obtain minimum VSWR reading.

If the dips found during the tuning procedure are so far downscale that it becomes difficult to tell whether a particular dip is lower or higher than the preceding one, you can increase the meter sensitivity and note readings that are farther upscale by turning the PUSH-ADJ knob clockwise. With this added sensitivity it may not be possible to dip to the meter zero, but any residual reading will represent a very small power level, probably less than 0.1 watt.

When the matching network has been adjusted to the lowest possible dip, it is properly tuned to present a 50 ohm resistive load to the transmitter. Make a note of the settings of the RESISTIVE and REACTIVE tuning and range controls, and the BAND switch. The next time you operate on this band, you can tune up quickly by returning the MN-4C controls to the same settings.

NOTE

With the range switch in 0-10 position, the tuning control would be recorded as the number on the knob dial between 0 and 10. With the range switch in the 10-20 position, 10 should be added to the number on the dial and record a number between 10 and 20. In the 20-30 switch position, add 20 and record a number between 20 and 30.

Adjust the transmitter plate tuning and loading controls as directed by the transmitter instruction manual. Push in on the PUSH-ADJ control and rotate the knob clockwise until the meter

needle lines up with the SET mark (full-scale) on the meter face. Release the knob. The meter is now calibrated for VSWR measurements.

3-5. OFF-THE-AIR TUNING.

If a 50 ohm dummy load that is capable of handling the full transmitter power output is available, it and the MN-4C can be used to to tune-up with minimum interference. Connect the 50 ohm dummy load to the DL connector on the MN-4C, switch the ANTENNA switch to GND/DL, switch the BAND switch to DIRECT, and turn on the transmitter. The transmitter can now be tuned to match the 50 ohm dummy load. Then reduce the transmitter power output, without changing the transmitter loading. As little as 10 watts input to the MN-4C is enough for tuning. Set the BAND switch to the desired band, the ANTENNA switch to the desired antenna, tune the matching network for minimum VSWR, and then increase the transmitter power to its normal operating level.

3-6. REFLECTED POWER.

It is possible to read reflected power with the MN-4C, although the instrument was not primarily designed to do this. To read reflected power, first rotate the PUSH-ADJ knob fully counter-clockwise, and set the meter function switch to FWD WATTS. Increase transmitter power to the desired level (do not exceed 300 watts on the meter), then change the meter function switch to the VSWR setting. Push in on the PUSH-ADJ knob and turn it clockwise until the meter indicates the same as forward power.

Release the PUSH-ADJ knob. The meter now indicates reflected power on the power scale.

3-7. USE WITH TRANSCEIVERS OR T/R COMBINATIONS.

Adjustment of the MN-4C with a tranceiver is done exactly as described in Sections 3-3 through 3-5. Since the received signal will be passed through the matching network, it is necessary to change the BAND switch to DIRECT, or to agree with the setting of the receiver bandswitch, when just tuning through the bands. If this is not done, the received signal will be attenuated by the matching network whenever the BAND switch setting is not the same as the band being tuned.

CHAPTER IV

MAINTENANCE

The MN-4C should be practically maintenance free, since it is a passive device. If either, or both, of the 1N295 diode rectifiers for the wattmeter are damaged, they must be replaced with the same type diodes. Substitution of other type diodes may seriously degrade the accuracy of the wattmeter. If any problems arise that cannot be corrected, either return the unit to your dealer, or write to our Service Department. Please describe your problem in detail, including external connections, control settings, type of antenna, transmitter, etc. Do not return your MN-4C to the factory without proper authorization.

R. L. DRAKE COMPANY
540 Richard Street
Miamisburg, Ohio 45342
ATTN: Customer Service Department
Telephone: (Area Code 513) 866-3211
Telex No. 288-017

R. L. DRAKE COMPANY
Western Region Sales & Service
2020 Western Street
Las Vegas, Nevada 89102
ATTN: Customer Service Department
Telephone: (Area Code 702) 382-9470
Telex No. 684-540

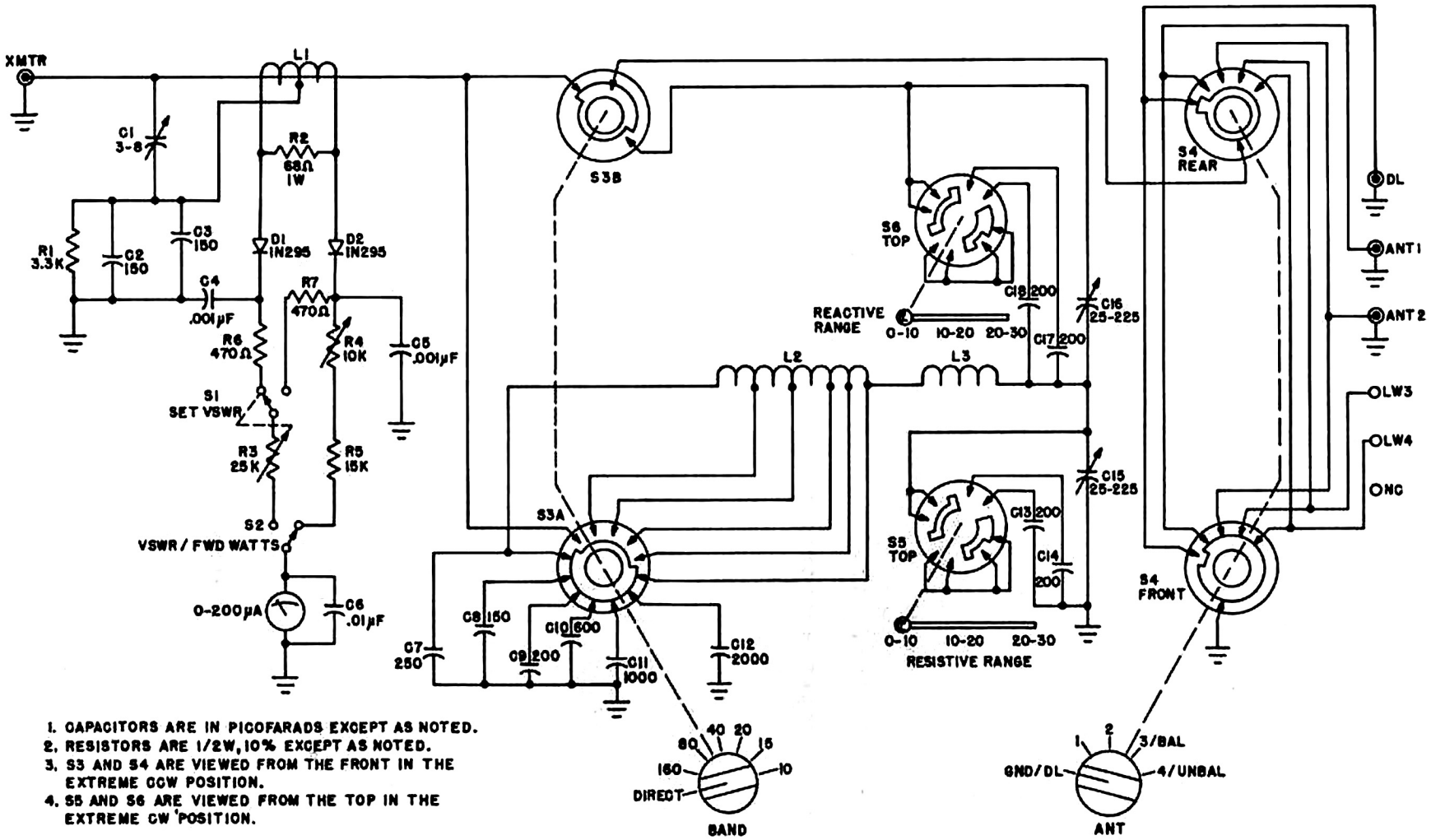

1. CAPACITORS ARE IN PICOFARADS EXCEPT AS NOTED.
2. RESISTORS ARE 1/2W, 10% EXCEPT AS NOTED.
3. S3 AND S4 ARE VIEWED FROM THE FRONT IN THE EXTREME CCW POSITION.
4. S5 AND S6 ARE VIEWED FROM THE TOP IN THE EXTREME CW POSITION.

DRAKE MN-4C SCHEMATIC DIAGRAM



DRAKE AMATEUR PRODUCTS

R-4C	*Receiver, covers the 160 meter through 10 meter amateur bands and up to fifteen additional 500 kHz ranges. It has 8-pole crystal filter selectivity with passband tuning and transceives with the T-4XC with excellent sensitivity.*
T-4XC	*Transmitter, covers the 160 through 10 meter amateur bands and most other frequencies between 1.5 and 30 MHz. It has 8-pole crystal filters for sideband selection. It may be used to transceive with the R-4C.*
TR-4C	*Transceiver, 300 Watt high frequency single-sideband unit covers the 80 meter through 10 meter amateur bands. Includes AM and CW modes, a linear, permeability-tuned VFO and two 8-pole crystal lattice filters.*
L-4B	*Linear Amplifier, built for continuous duty at full capacity. 2000 Watts PEP on SSB. 1000 Watts on AM, CW and RTTY. Covers the 80 meter through 10 meter bands.*
C-4	*Station Console, matches Drake's T-4XC, R-4C and TR-4C.*
MN-4	*Antenna Matching Network, matches 50 Ohm transmitter output to coax antenna feedline with VSWR up to 5:1. An integral Wattmeter reads forward power in Watts and VSWR directly. 200 Watts continuous duty output.*
MN-2000	*Antenna Matching Network. Same as MN-4 except: 1000 Watts continuous duty output (2000 Watts PEP) and 3 antenna connectors switch-selectable from front panel.*
W-4	*Wattmeter, reads forward and reflected power directly in Watts (VSWR from nomograph). Range: 200 and 2000 Watts full scale, 1.8 to 54 MHz.*
WV-4	*Wattmeter, reads forward and reflected power directly in Watts (VSWR from nomograph). Range: 100 and 1000 Watts full scale, 20 to 200 MHz.*
TR-22C	*Transceiver, 2 meter VHF-FM, portable. Twelve channels, self-contained batteries and attached microphone.*
RCS-4	*Remote Coax Switch, provides remote selection of up to five antennas, using only one main feedline. Allows grounding of unused antennas. Motor driven switches controlled from station located console.*
SSR-1	*General Coverage Receiver, 0.5-30 MHz continuous. All solid state.*

For information on any of our products, please feel free to write our Sales Department, 540 Richard Street, Miamisburg, Ohio 45342 or call direct, 513-866-2421.

